Signet 2750 DryLoc® pH/ORP Sensor Electronics

In-line 2750 | Submersible 2750 | 2750-7

DryLoc® Electrodes sold separately.

Features

- **In-line integral mount and submersible installation versions**
- **Automatic temperature compensation**
- **Auto configuration for pH or ORP operation**
- **Optional EasyCal calibration aid with automatic buffer recognition**
- **Junction boxes for convenient wiring**
- **Patented DryLoc® connector provides a quick and secure connection to the sensor***

The Signet 2750 pH/ORP Sensor Electronics featuring the DryLoc® connector, provides a variety of functions to suit various requirements.

The 2750 has a preamplified signal and features two different outputs: a two-wire 4 to 20 mA loop output with EasyCal function or a digital (S^3L) output which allows for longer cable lengths and is compatible with the Signet 8900 or 9900 instruments.

The 2750 self-configures for pH or ORP operation via automatic recognition of the electrode type. The optional EasyCal feature allows simple push-button calibration and includes an LED indicator for visual feedback.

The DryLoc® electrode connector quickly forms a robust assembly for submersible and in-line installations. NEMA 4X junction enclosures are integral parts of the 2750 in-line version and are also available as accessories for the submersible 2750.

The 2750 submersible preamplifier can also be used as an In-line preamplifier when used with the 3/4" or 1" threaded sensors including the 2724, 2774 and 2764 series electrodes. The 2750 In-line preamplifier can be used with Signet fittings up to DN100 (4 in.) and wet-tap assemblies.

Applications

- **Water and Wastewater Treatment**
- **Neutralization Systems**
- **Scrubber Control**
- **Effluent Monitoring**
- **Surface Finishing**
- **Flocculent Coagulation**
- **Heavy Metal Removal and Recovery**
- **Toxics Destruction**
- **Sanitization Systems**
- **Pool & Spa Control**
- **Aquatic Animal Life Support Systems**

*U.S. Patent No.: 6,666,701

Distributed By:
APPLIED MEMBRANES INC.®
2450 Business Park Dr. Vista, CA 92081 ☎ (760) 727-3711 🖷 (760) 727-4427
www.appliedmembranes.com ✉ sales@appliedmembranes.com

Specifications

General				
Compatible Electrodes				
	Signet DryLoc® pH and ORP Electrodes, Models 2724-2726, 2756-2757 Wet-Tap, 2764-2767, 2774-2777			
Operating Range	pH		0 to 14 pH	
	ORP		±2,000 mV	
Response Time	pH		< 6 sec. for 95% of change	
	ORP		application dependent	
Materials	In-line		Valox® (PBT)	
	Submersible		CPVC	
Electrical				
Cable	4.6 m	15 ft	3-conductor shielded (3-2750-3 or -4 submersible sensor electronics only)	
	22 AWG		For 9900 and 4 to 20 mA max. cable length is 1000 ft. (For 8900 please refer to the Cable Calculation Table on pg. 333 for max. cable length)	
Power	12 to 24 VDC		±10%, regulated for 4 to 20 mA output	
	5 to 6.5 VDC		±5% regulated recommended, 3 mA max., for digital (S^3L) output	
Current Output	pH		Fixed 4 to 20 mA, isolated, = 0 to 14 pH (custom scaling available with 0250 tool)	
	ORP		Fixed 4 to 20 mA, isolated, = -1000 to 2000 mV (custom scaling available from ± 000 mV with 0250 tool)	
Max Loop Resistance	100 Ω max. @ 12 V		325 Ω max. @ 18 V	600 Ω max. @ 24 V
Accuracy	±32 µA			
Resolution	±5 µA			
Update Rate	0.5 seconds			
Error Indication	3.6 mA			
Digital (S^3L) Output	Serial ASCII, TTL level 9600 bps			
Accuracy	pH		± 0.03 pH @ 25 °C	± 0.03 pH @ 77 °F
	ORP		± 2 mV @ 25 ° C	± 2 mV @ 77 °F
Resolution	pH		≤ 0.01 pH	
	ORP		1 mV	
Temperature	≤ 0.2 °C		0.36 °F	
Update Rate	0.5 seconds			
Available Data	Raw mV, pH or ORP, temperature (pH)			
Error Indication	Open input diagnostic			
Input Impedance, Z	$>10^{11}\Omega$			
Environmental				
Enclosure	3-2750-1 & -2		NEMA 4X/IP65 with electrode connected	
	3-2750-3 & -4		NEMA 6P/IP68 with electrode and watertight conduit and/or extension pipe connected	
Max. Temperature/Pressure Rating				
Operating Temperature				
submersible	0 °C to 85 °C		32 °F to 185 °F	
in-line	0 °C to 110 °C		32 °F to 230 °F	
Storage Temperature	-20 °C to 85 °C		-4 °F to 185 °F	
Relative Humidity	0 to 95%, non-condensing (without electrode connected)			
Shipping Weight				
	2750-1 & 2		0.75 kg	1.65 lb
	2750-3 & -4		0.64 kg	1.41 lb
Standards and Approvals				
	CE, FCC			
	RoHS compliant, China RoHS			
	Manufactured under ISO 9001 for Quality and ISO 14001 for Environmental Management and OHSAS 18001 for Occupational Health and Safety			

Dimensions

3-2750-1,-2

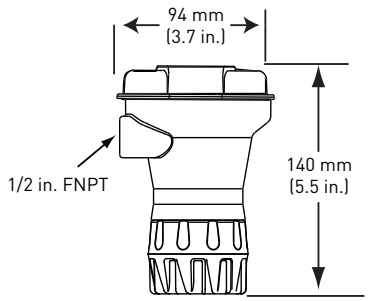

3-2750-3, -4

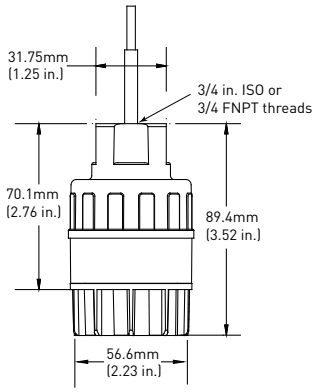

3-2750-7

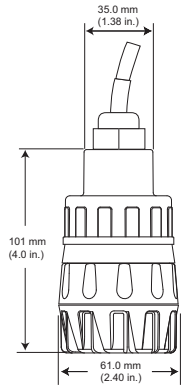

System Overview

In-Line Installation

Panel Mount	4 to 20 mA input	
Signet Instruments 8900 9900 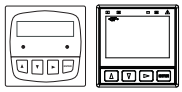	Customer Supplied Chart Recorder or Programmable Logic Controller 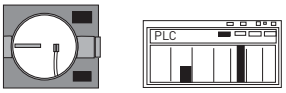	
Signet 2750 Sensor Electronics	**Signet 2750 Sensor Electronics** with Signet 3-8050-2 Universal Junction Box (EasyCal) 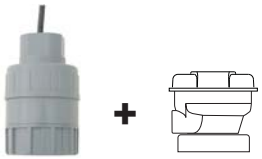	**Signet 2750 Sensor Electronics**
Signet Electrodes 2724-2726 2764-2767 2774-2777 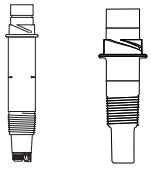		

2724-2726 DryLoc® Electrodes: Use GF Fittings* or customer supplied 3/4 in. NPT fittings
2764-2767 and 2774-2777 DryLoc® Electrodes: Use customer supplied 3/4 in. or 1 in. NPT fittings

All sold separately

Submersible Installation / Wet-Tap Installation

Panel Mount	4 to 20 mA Input
Signet Instruments 8900 9900 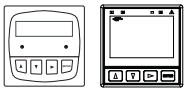	Customer Supplied Chart Recorder or Programmable Logic Controller 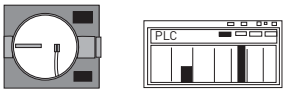
Signet 2750 Sensor Electronics with customer supplied pipe extension or conduit, 3/4 in. NPT or ISO 7/1-R 3/4 threads**	**Signet 2750 Sensor Electronics** with Signet Wet-Tap Electrode 2756, 2757 and Signet 3719 Wet-Tap 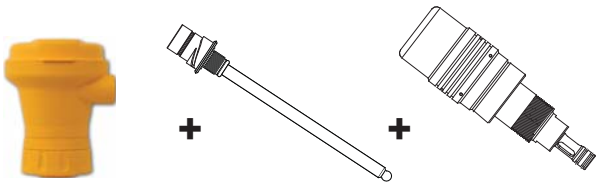
Signet Electrodes 2724-2726 2764-2767 2774-2777 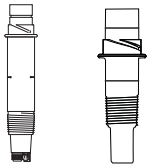	GF Tees and Fittings see model 3719 for more info 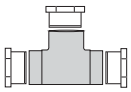

All sold separately

* See fittings section for more information.

2750 Product Selection Guide

1. Choose the Electrode	2724-2726 Can use Any 3-272x series Electrode	2764-2767 Differential 3-2764-1 3-2764-2 3-2766-1 3-2766-2	2774-2777 ORP electrodes must have 10K ID resistor use: 3-2775, 3-2777 pH Electrodes can be either the 1K or 3K use: 3-2774, 3-2774-1, 3-2776, 3-2776-1	2756 and 2757 Wet-Tap Can use any Wet-Tap 275x series electrode
2. Determine the mounting style: In-line **And** -In-line fitting **Or** Submersible	2750-1 or -2	2750-3 or -4	2750-1 or -2 2750-3 or -4	2750-1 or -2 2750-3 or -4	2750-1 or -2
	Signet fitting	¾" reducing tee	1" threaded tee	¾" reducing tee	3719 Wet-Tap Assembly (Submersible not applicable with Wet-Tap assembly)
	2750-3 or -4 and cable conduit (customer supplied) connected to ¾" sensor electronics				
3. Junction Boxes	3-8050-1: Use when extending the submersible cable over long distance. 3-8050-2: Use with the submersible 2750-3 or -4 and the in-line 2750-1 for best calibration results with the EasyCal function when using the blind 4 to 20 mA output.				
4. Choose the output instrument Digital (S^3L) **Or** 4 to 20 mA	8900 or 9900 Instruments		**OR**	PLCs or Chart Recorders	

Model 2750 Ordering Information

1) Model 2750 requires 12 to 24 VDC to function as a blind 4 to 20 mA output transmitter.

2) Order a 3-2750-2 or any other 2750 with a junction box 3-8050-2 if the EasyCal feature is desired.

3) Conduit and mounting brackets for submersion installation must always be used (customer supplied).

4) The 3-2759 System Tester must be ordered with the adapter cable 3-2759.391 for exclusive use with the 2750.

5) All sensor electronics, preamplifiers and connectors require a DryLoc® electrode for full system installation.

Application Tips

- The EasyCal feature automatically recognizes standard 4.0, 7.0, and 10.0 pH buffer or ORP quinhydrone solutions of 87 and 264 mV and simplifies calibration

- Frequency of calibration of electrodes is dependent upon the application.

Ordering Information

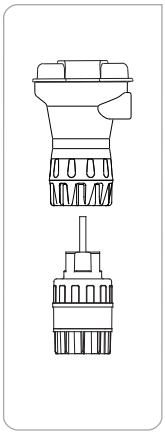

Mfr. Part No.	Code	Description
In-line Sensor Electronics (Yellow body)		
3-2750-1	**159 000 744**	Recommended for 8900 or 9900 instruments
3-2750-2	**159 000 745**	with EasyCal, recommended for 4 to 20 mA use
3-2750-7	**159 001 671**	pH electronics, Digital (S^3L), 4.6 m (15 ft) cable
Submersible Sensor Electronics (Grey body)		
3-2750-3	**159 000 746**	with 4.6 m (15 ft) cable and ¾ in. NPT threads - when 4 to 20 mA is required use the 3-8050-2 junction box with EasyCal
3-2750-4	**159 000 842**	Submersible Sensor electronics with 4.6 m (15 ft) cable and ISO 7/1R 3/4 threads - when 4 to 20 mA is required use the 3-8050-2 junction box with EasyCal

Accessories and Replacement Parts

Mfr. Part No.	Code	Description
Calibration		
3-2700.395	**159 001 605**	Calibration kit: includes 3 polyproplyene cups, box used as cup stand, 1 pint pH 4.01, 1 pint pH 7.00
3822-7115	**159 001 606**	20 gm bottle quinhydrone for ORP calibration (must use pH 4.01 and/or pH 7.00 buffer solutions)
3-2759	**159 000 762**	pH/ORP system tester (adapter cable sold separately)
3-2759.391	**159 000 764**	2759 adapter cable for use with 2750 -DryLoc® sensor electronics
3-0700.390	**198 864 403**	pH buffer kit (1 each 4, 7, 10 pH buffer in powder form, makes 50 ml of each)
3822-7004	**159 001 581**	pH 4 buffer solution, 1 pint (473 ml) bottle
3822-7007	**159 001 582**	pH 7 buffer solution, 1 pint (473 ml) bottle
3822-7010	**159 001 583**	pH 10 buffer solution, 1 pint (473 ml) bottle
Mounting		
3-8050.390-1	**159 001 702**	Retaining nut replacement kit, Valox K4530
3-8050-1	**159 000 753**	Universal mount junction box
3-8050-2	**159 000 754**	Universal mount junction box w/EasyCal (for submersible applications, use with 3-2750-3/4 where 4 to 20 mA is required)
3-9000.392-1	**159 000 839**	Liquid tight connector kit, NPT (1 connector)
3-9000.392-2	**159 000 841**	Liquid tight connector kit, PG 13.5 (1 connector)
Other		
5523-0322	**159 000 761**	Sensor cable (per ft), 3-cond. plus shield, 22 AWG, black/red/white (for use with 2750)

Distributed By:
APPLIED MEMBRANES INC.®
2450 Business Park Dr. Vista, CA 92081 ☎ (760) 727-3711 🖷 (760) 727-4427
www.appliedmembranes.com ✉ sales@appliedmembranes.com