Model 781 Shown
(Mounting rails sold separately)

8 Frame Block-Style Stainless Steel Plunger Pump

Standard Model	**781**
Flushed Model	**781K**
Gearbox Model	**781G1**

FEATURES

- Triplex design delivers high efficiency and low pulsation.
- Durable V-Packings are lubricated and cooled by the liquid being pumped.
- Pre-set Lo-Pressure Seals provide secondary protection against external leaks and require no packing adjustment.
- Special high-density, polished, concentric plungers provide a true wear surface and extended seal life.
- Optimal elastomers for compatibility with many liquids and temperatures up to 200° F.

COMMMON FEATURES

Bore	0.551"	(14 mm)
Stroke	0.945"	(24 mm)
Crankcase Capacity	25 oz.	(0.75 l)
Maximum Liquid Temperature	160°F	(71°C)
Above 130°F call Cat Pumps for inlet conditions and elastomer recommendations.		
Inlet Ports (2)	1/2" NPTF	(1/2" NPTF)
Flushing Ports (2)*	1/8" NPTF	(1/8" NPTF)
Discharge Ports (2)	3/8" NPTF	(3/8" NPTF)
Shaft Diameter - Single End	0.945"	(24 mm)
Weight	48.1 lbs.	(21.8 kg)
Dimensions	13.15 x 9.25 x 6.06"	(334 x 235 x 154 mm)

*Flushed K Models: Special ported inlet manifold permits an external flush liquid providing cooling for hi-temp liquids and low lubricity liquids.

⚠ CAUTIONS AND WARNINGS

All High Pressure Systems require a primary pressure regulating device (i.e. regulator, unloader) and a secondary pressure relief device (i.e. pop-off valve, relief valve). Failure to install such relief devices could result in personal injury or damage to pump or property. CAT PUMPS does not assume any liability or responsibility for the operation of a customer's high pressure system.

Read all CAUTIONS and WARNINGS before commencing service or operation of any high pressure system. The CAUTIONS and WARNINGS are included in each service manual and with each Accessory Data sheet. CAUTIONS and WARNINGS can also be viewed online at www.catpumps.com/cautions-warnings or can be requested directly from CAT PUMPS.

WARRANTY

View the Limited Warranty on-line at www.catpumps.com/warranty.

SPECIFICATIONS

MODELS 781, 781K, 781G1

	U.S. Measure	Metric Measure
Flow	4.5 gpm	(17 lpm)
Pressure Range	100 to 5000 psi	(7 to 345 bar)
Inlet Pressure Range	Flooded to 60 psi	(Flooded to 4 bar)
RPM	1700 rpm	(1700 rpm)
Engine RPM (781G1)	3465 rpm	(3465 rpm)

See Gearbox Data Sheet for additional information.

ALTERNATE SPECIFICATIONS

MODEL 781, 781K

Flow	4.7 gpm	(17.8 lpm)
Pressure Range	100 to 5000 psi	(7 to 345 bar)
Inlet Pressure Range	Flooded to 60 psi	(Flooded to 4 bar)
RPM	1750 rpm	(1750 rpm)

ELECTRIC HORSEPOWER REQUIREMENTS

FLOW		PRESSURE				MOTOR PULLEY SIZE Using 1725 RPM Motor& Std. Pump Pulley	
		psi 3000	psi 3500	psi 4000	psi 5000		
U.S. gpm	lpm	bar 210	bar 245	bar 275	bar 345	rpm	Pulley O.D.
4.0	15.0	8.2	9.6	11.0	13.7	1511	8.8
4.5	17.0	9.3	10.8	12.3	15.4	1700	9.9
4.5	17.0	9.3	10.8	12.3	15.4	1700	Gearbox
4.7	17.8	9.7	11.3	12.9	16.1	1750	Direct Drive

DETERMINING THE PUMP R.P.M. $\frac{\text{Rated gpm}}{\text{Rated rpm}} = \frac{\text{"Desired" gpm}}{\text{"Desired" rpm}}$

DETERMINING THE REQUIRED H.P. $\frac{\text{gpm x psi}}{1460} = \frac{\text{Electric Brake}}{\text{H. P. Required}}$

DETERMINING MOTOR PULLEY SIZE $\frac{\text{Motor Pulley O.D.}}{\text{Pump rpm}} = \frac{\text{Pump Pulley O.D.}}{\text{Motor rpm}}$

See complete Drive Packages [Inclds: Pulleys, Belts, Hubs, Key] Tech Bulletin 003.
Refer to pump **Service Manual** for repair procedure and additional technical information.

PARTS LIST

ITEM	PART NUMBER 781/781G1	MATL	781K	MATL	DESCRIPTION	QTY
2	*30067*	*STL*	*30067*	*STL*	*Key (M8x7.5x25)*	*1*
5	92538	S	92538	S	Screw, HHC, Sems (M6x16)	8
8	43466	AL	43466	AL	Cover, Bearing	1
9	815280	FBR	815280	FBR	Split Shim, 2 Pc.	1/2
10	12393	NBR	12393	NBR	O-Ring, Bearing Cover	2
11	43222	NBR	43222	NBR	Seal, Oil, Crankshaft	1
15	43221	STL	43221	STL	Bearing, Roller	2
20	48863	TNM	48863	TNM	Rod Assy, Connecting [6/02]	3
25	119234	FCM	119234	FCM	Crankshaft - Single End (60mm Extension)	1
	46554	***FCM***	—	—	*Crankshaft - Single End (34mm Extension) Gearbox Only*	*1*
30	44967	AL	44967	AL	Cover, Blind Bearing	1
31	*828710*	*PE*	*828710*	*PE*	*Protector, Oil Cap w/Foam Gasket*	*1*
32	44666	RTP	44666	RTP	Cap, Oil Filler, Domed	1
33	14177	NBR	14177	NBR	O-Ring, Filler Cap - 70D	1
37	92241	—	92241	—	Gauge, Oil, Bubble w/Gasket - 80D	1
38	44428	NBR	44428	NBR	Gasket, Flat Flex., Oil Gauge - 80D	1
40	92538	S	92538	S	Screw, HHC, Sems (M6x16) (See Tech Bulletin 106)	4
48	25625	STCP	25625	STCP	Plug, Drain (1/4"x19BSP)	1
49	23170	NBR	23170	NBR	O-Ring, Drain Plug - 70D	1
50	127701	AL	127701	AL	Cover, Rear [03/10]	1
51	14047	NBR	14047	NBR	O-Ring, Rear Cover - 70D (See Tech Bulletin 106)	1
53	127698	AL	127698	AL	Crankcase w/Guide Pins [03/10]	1
54	27488	S	27488	S	Pin, Guide	2
64	43237	CM	43237	CM	Pin, Crosshead	3
65	48913	SHS	48913	SHS	Rod, Plunger, Short [05/02]	3
69	126589	STCP R	126589	STCP R	Washer, Oil Seal	3
70	43228	NBR	43228	NBR	Seal, Oil, Crankcase	3
75	43328	S	43328	S	Slinger, Barrier	3
88	45697	S	45697	S	Washer, Keyhole (M18)	3
89	43505	BB	43505	BB	Spacer, Plunger	3
90	45890	CC	45890	CC	Plunger (M14x72)	3
95	89653	SS	89653	SS	Stud, Plunger Retainer (M6x58)	3
96	43235	PTFE	43235	PTFE	Back-up-Ring, Plunger Retainer	3
97	17399	NBR	17399	NBR	O-Ring, Plunger Retainer - 80D	3
	14160	*FPM*	*14160*	*FPM*	*O-Ring, Plunger Retainer - 80D*	*3*
	◆ *46204*	*EPDM*	◆ *46204*	*EPDM*	*O-Ring, Plunger Retainer - 70D*	*3*
98	44041	SS	44041	SS	Gasket, Plunger Retainer	3
99	49665	SS	49665	SS	Retainer, Plunger (M6)	3
100	995686	PVDF	995686	PVDF	Retainer, Seal (See Tech Bulletin 105)	3
104	701734	NBR	701734	NBR	O-Ring, Inlet Adapter - 70D	3
	701912	*FPM*	*701912*	*FPM*	*O-Ring, Inlet Adapter - 75D*	*3*
	◆ *703297*	*EPDM*	◆ *703297*	*EPDM*	*O-Ring, Inlet Adapter - 70D*	*3*
105	701587	SS	701587	SS	Adapter, Inlet	3
106	48821	NBR	48821	NBR	Seal, LPS w/SS-Spg	3
	701790	*SFTA**	*701790*	*SFTA**	*Seal, LPS w/SS-Spg*	*3*
	◆ *49466*	*EPDM*	◆ *49466*	*EPDM*	*Seal, LPS w/SS-Spg*	*3*
110	**49205**	**SS**	—	—	Manifold, Inlet/Discharge, Block-Style	1
	—	—	**49241**	**SS**	Manifold, Inlet/Discharge, Block-Style Flushed (1/8" Flushed Port)	1
112	701595	NBR	701595	NBR	O-Ring, V.P. Spacer - 70D	3
	701913	*FPM*	*701913*	*FPM*	*O-Ring, V.P. Spacer - 75D*	*3*
	◆ *703298*	*EPDM*	◆ *703298*	*EPDM*	*O-Ring, V.P. Spacer - 70D*	*3*
117	87952	S	87952	S	Screw, HSH (M10x55)	4
122	701598	PTFE	701598	PTFE	Back-Up Ring, V.P. Cylinder	3
123	701596	NBR	701596	NBR	O-Ring, V.P. Cylinder - 70D	3
	701914	*FPM*	*701914*	*FPM*	*O-Ring, V.P. Cylinder - 75D*	*3*
	◆ *703318*	*EPDM*	◆ *703318*	*EPDM*	*O-Ring,* V.P. Cylinder	*3*
124	701589	SS	701589	SS	Cylinder V.P.	3
126	701682	SS	701682	SS	Adapter, Female	3
127	45895	SNG	45895	SNG	V-Packing	9
	701911	*SFTA**	*701911*	*SFTA**	*V-Packing*	*9*
128	701683	SS	701683	SS	Adapter, Male	3
139	*45156*	*SS*	*45156*	*SS*	*Plug, Inlet/Discharge Manifold (1/2" NPT)*	*1*
162	701599	PTFE	701599	PTFE	Back-up-Ring, Valve Seat	12
163	701597	NBR	701597	NBR	O-Ring, Seat - 70D	12
	701915	*FPM*	*701915*	*FPM*	*O-Ring, Seat - 75D*	*12*
	◆ *703180*	*EPDM*	◆ *703180*	*EPDM*	*O-Ring, Seat*	*12*
164	701591	SS	701591	SS	Seat	6
166	701751	SS	701751	SS	Valve	6
167	44056	SS	44056	SS	Spring	6
168	44565	PVDF	44565	PVDF	Retainer, Spring	6
185	49214	SS	49214	SS	Manifold, Valve, Block-Style	1
188	87952	S	87952	S	Scew, HSH, (M10x55)	14
255	*30243*	*STZP*	*30243*	*STZP*	*Kit, Direct Mount*	*1*
260	*30645*	*STZP R*	*30645*	*STZP R*	*Assy, Angle Rail A*	*1*
	30611	*STZP R*	*30611*	*STZP R*	*Assy, Angle Rail B*	*1*
265	*30660*	—	*30660*	—	*Kit, Complete Mounting*	*1*
274	*33000*	*STL*	*33000*	*STL*	*Hub, (M24) H Series (See Tech Bulletin 003)*	*1*
283	*34334*	—	*34334*	—	*Kit, Oil Drain (3/8"x24")*	*1*
299	***811483***	***SS***	—	—	*Head, Complete, Block-Style*	*1*
	—	—	***811485***	***SS***	*Head, Complete, Block-Style, Flushed*	*1*

EXPLODED VIEW

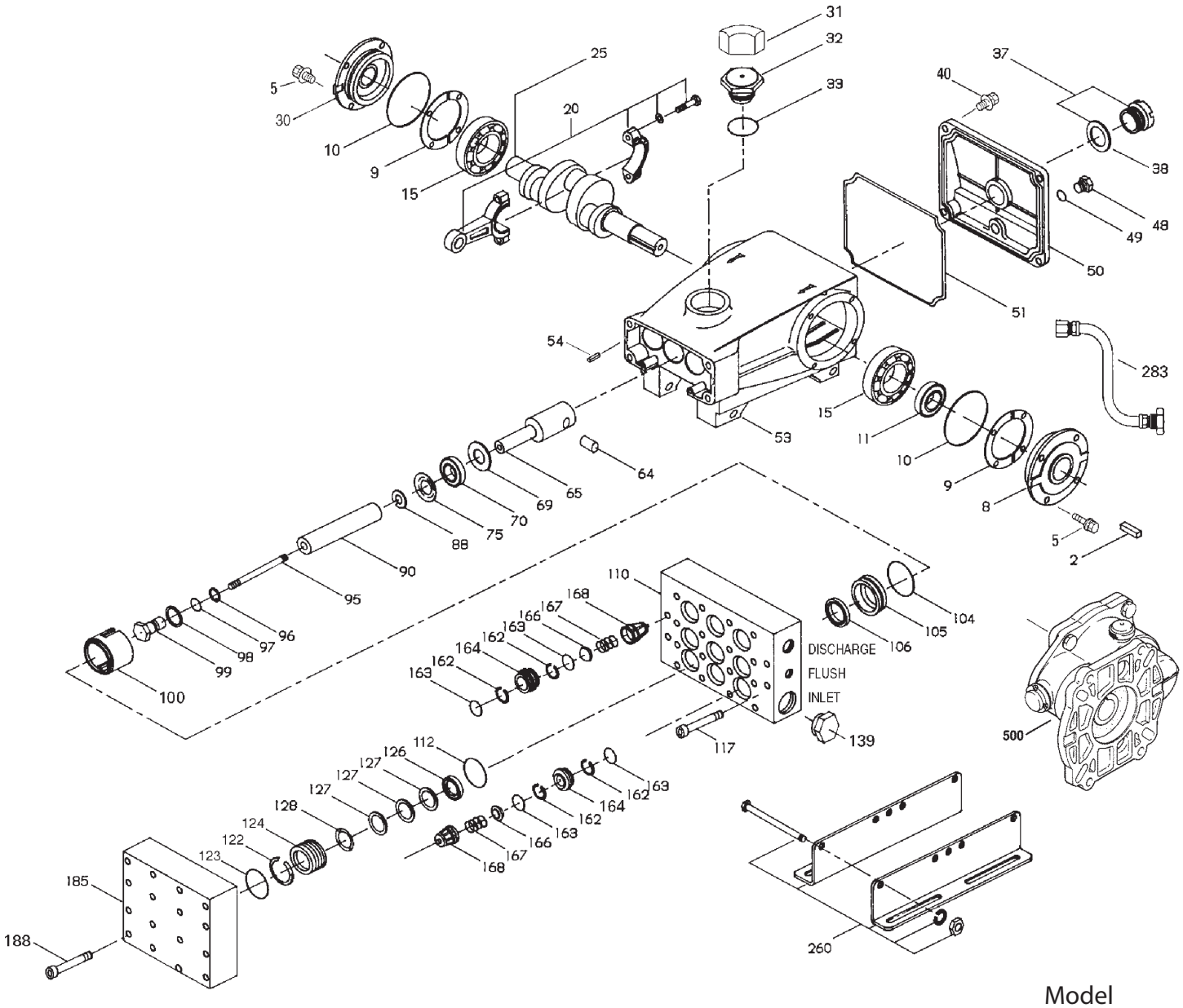

Model
781, 781K, 781G1
June 2013

ITEM	PART NUMBER 781/781G1	MATL	781K	MATL	DESCRIPTION	QTY
300	*701883*	*NBR*	*701883*	*NBR*	*Kit, Seal (Inclds: 96,97,104,106,112,122,123,127)*	*1*
	701920	*FPM**	*701920*	*FPM**	*Kit, Seal (Inclds: 96,97,104,106,112,122,123,127)* ***781.0110, 781K.0110***	*1*
	◆ *76883*	*EPDM*	◆ *76883*	*EPDM*	*Kit, Seal (Inclds: 96,97,104,106,112,122,123,127)* ***781.0220, 781K.0220***	*1*
310	*701884*	*NBR*	*701884*	*NBR*	*Kit, Valve (Inclds: 162,163,164,166,167,168)* ***781, 781GI, 781K***	*2*
	701921	*FPM*	*701921*	*FPM*	*Kit, Valve (Inclds: 162,163,164,166,167,168)* ***781.0110, 781K.0110***	*2*
	◆ *76884*	*EPDM*	◆ *768884*	*EPDM*	*Kit, Valve (Inclds: 162,163,164,166,167,168)* ***781.0220, 781K.0220***	*2*
350	*30696*	*STZP*	*30696*	*STZP*	*Plier, Reverse*	*1*
352	*44050*	*STZP*	*44050*	*STZP*	*Tool, Oil Gauge Removal*	*1*
370	—	—	***990663***	—	*Assembly, Flushing, 5 Gal, 1 GPM, 3 PSI*	*1*
500	*8071*	—	—	—	*Gearbox, 1" (See 8051 Data Sheet)*	*1*
	6107	—	*6107*	—	*Oil, Bottle (21 oz.) ISO 68 Hydraulic (Fill to specified crankcase capacity prior to start-up)*	*1-2*
	6119	—	*6119*	—	*Lubricant, Antiseize (1 oz.)*	*1*

Bold print numbers are unique to a particular pump model. *Italics are optional items.* ◆Silicone oil/grease required.
[ ] Date of latest production change. R Components comply with RoHS Directive. *Review materail codes for individual items (SFTA generally may be used as alternate).
See Tech Bulletins 002, 003, 024, 035, 036, 043, 053, 054, 061, 064, 067, 074, 077, 083, 105 and 106 for additional information.
See 8051-8078 Gearbox data sheet for optional gearbox drive.
MATERIAL CODES (Not Part of Part Number): AL=Aluminum CC=Ceramic CM=Chrome-Moly
EPDM=Ethylene Propylene Diene Monomer FBR=Fiber FCM=Forged Chrome-Moly FPM=Fluorocarbon NBR=Medium Nitrile (Buna-N)
PE=Polyethylene PTFE=Pure Polytetrafluoroethylene PVDF=Polyvinylidene Fluoride RTP=Reinforced Composite S=304SS SFTA=Special Blend PTFE Tan
SHS=304SS/High Strength SS=316SS STCP=Steel/Chrome Plated STL=Steel STZP=Steel/Zinc Plated TNM=Special High Strength

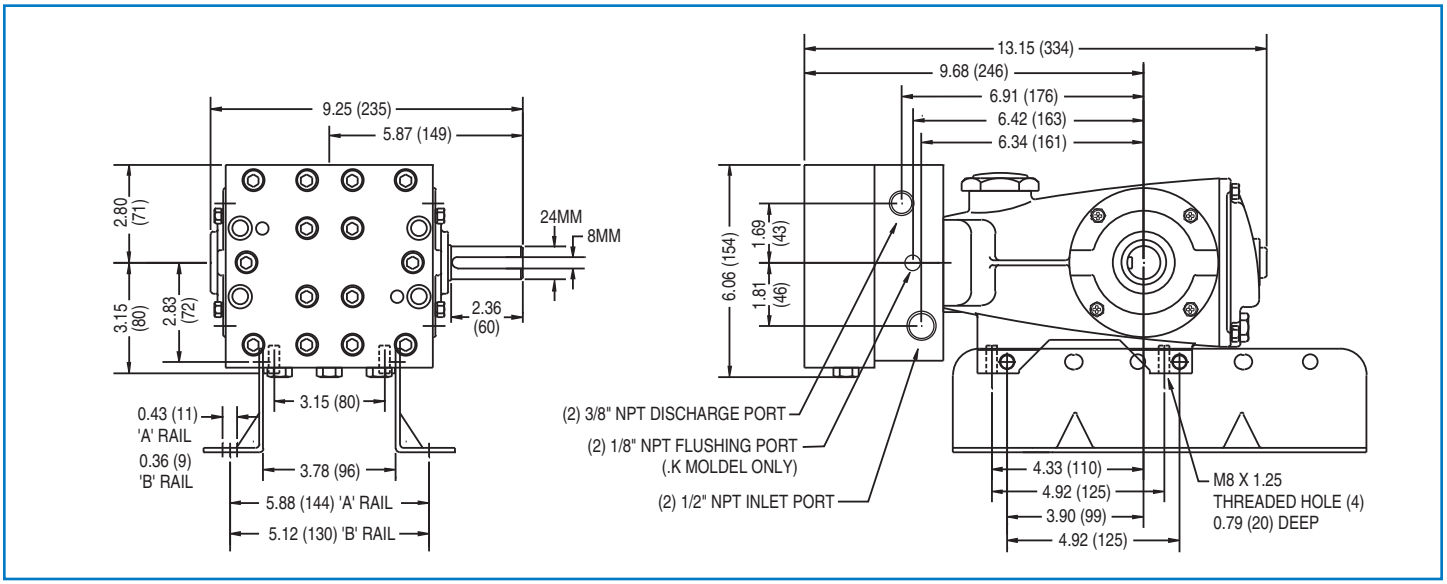

Models 781, 781K

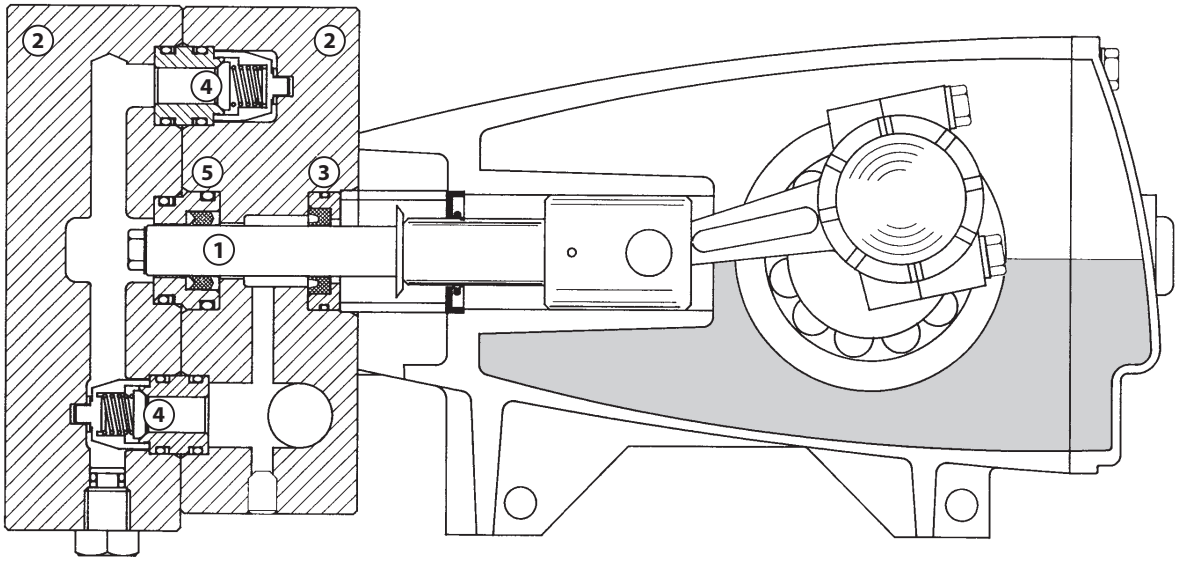

1 Special concentric, high density, polished, solid ceramic **plungers** provide a true wear surface and extended seal life.

2 **Manifolds** are 316 SS block-style for long term, continuous duty and corrosion resistance.

3 **Standard Models:** Lo-Pressure Seals and V-Packings are completly lubricated and cooled by the liquid being pumped.

4 316 SS **valves and seats** provide corrosion-resistance, ultimate seating and extended life.

5 Specially formulated, Cat Pump exclusive, **V-Packings** offer unmatched performance and seal life.

6 Optional special ported **Flushed Inlet Manifold** permits external flush for lubricating and cooling seals when pumping liquids such as DI water, Hi-Temp or low lubricity. (Not Shown)

Distributed By:

APPLIED MEMBRANES INC.®

Industry Leader in RO Expertise and Membrane Applications since 1983™

2450 Business Park Dr., Vista, CA 92081 ☎ (760) 727-3711 🖷 (760) 727-4427

www.appliedmembranes.com ✉ sales@appliedmembranes.com

CAT PUMPS® *The Pumps with Nine Lives*

PN 993124 Rev E 6/13 13248