300 PSI
END PORT

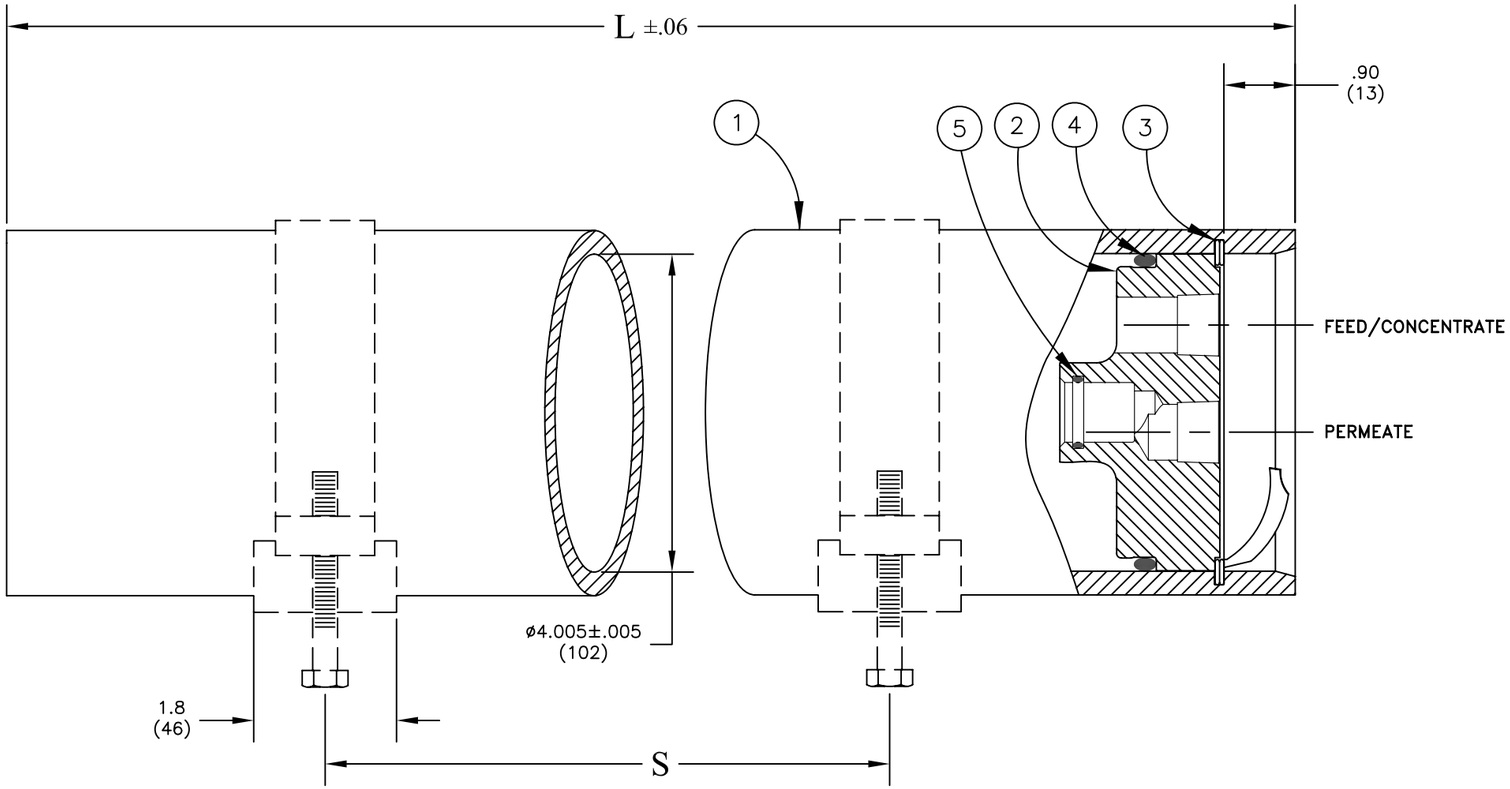

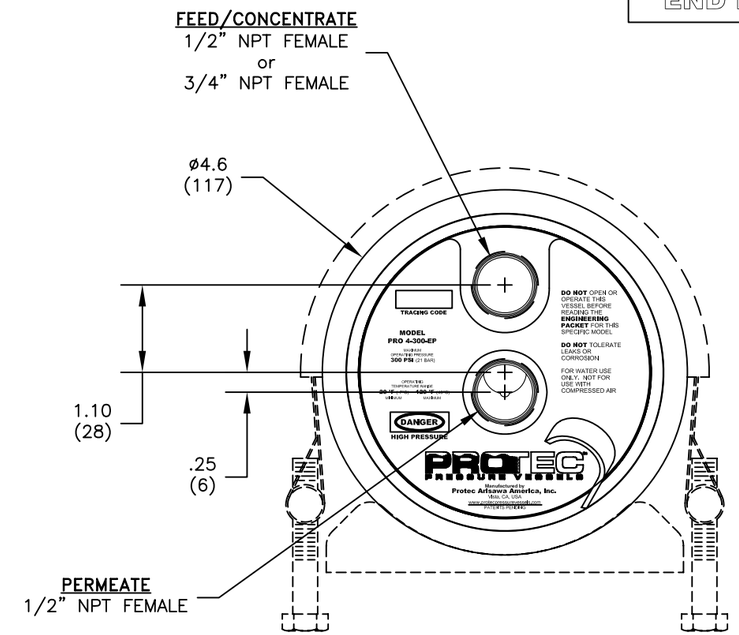

Shell Length Code	L inch (mm)	S Span in (mm)	Empty Weight lb (kg)
-1	44.3 (1125.2)	28 (711)	10 (5)
-2	84.3 (2141.2)	56 (1422)	18 (8)
-3	124.3 (3157.2)	80 (2032)	26 (12)

ITEM	QTY	P/N	DESCRIPTION	MATERIAL
1	1	4040084	Shell	Filament Wound, Epoxy FRP
2	2	4040087-1 4040088-1	End Plug, 1/2" NPT Feed (shown) End Plug, 3/4" NPT Feed	PVC Thermoplastic PVC Thermoplastic
3	2	4040079	Retaining Ring w/ Finger Pull	Stainless Steel, 300 Series
4	2	6180342	Plug Seal, O-Ring	Ethylene Propylene
5	2	6180116	PWT Seal, O-Ring	Ethylene Propylene
OPTIONAL VESSEL SUPPORT				
6	2	4040037	Support Saddle	Polyurethane
7	2	4040040	Strap Assembly	Stainless Steel, 300 Series
8	4	6150001	Strap Screw	Stainless Steel, 18-8

OPTIONAL VESSEL SUPPORT
SUPPORT VESSEL AT SPAN "S"

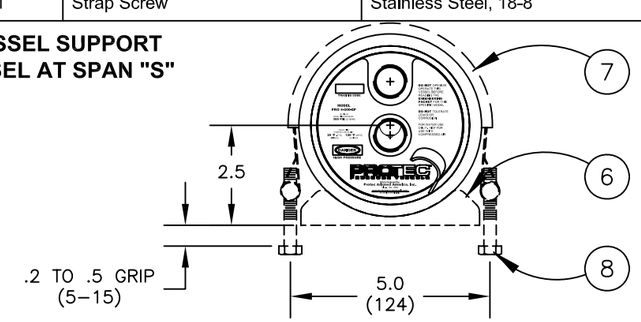

NOTES:
DIMENSIONS IN INCHES (MM APPROX.)

FOR REFERENCE ONLY, NOT TO BE USED FOR CONSTRUCTION UNLESS CERTIFIED

CENTER VESSEL ON 2 SUPPORTS AT SPAN "S".

INCORRECT MANIFOLDING WILL CAUSE SEVERE LOCAL STRESS AROUND PORT AND MAY RESULT IN LEAKS AND PREMATURE FAILURE. TAKE EVERY PRECAUTION LISTED IN THIS PACKET.

SPECIFICATIONS SUBJECT TO CHANGE WITHOUT NOTICE

PROTEC arisawa

PRO 4-300-EP

ENGR			
AP 1/27/04			
QLTY WJ 1/27/04			
DRAWN DS 1/27/04	ECO 10119	REVISED 4/28/11	DRAWING 104003	REV K

Distributed By:
APPLIED MEMBRANES INC.®
Industry Leader in RO Expertise and Membrane Applications since 1983™
2450 Business Park Dr., Vista, CA 92081 ☎ (760) 727-3711 🖷 (760) 727-4427
www.appliedmembranes.com ✉ sales@appliedmembranes.com